SKETCH SHOWING PROPOSED
SIGNUM COMPOUND LOCATION

NOT TO SCALE

ELEVATION PLAN
NOT TO SCALE

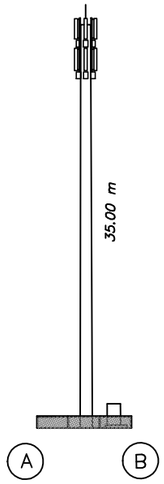

PROPOSED COMPOUND LAYOUT PLAN
NOT TO SCALE

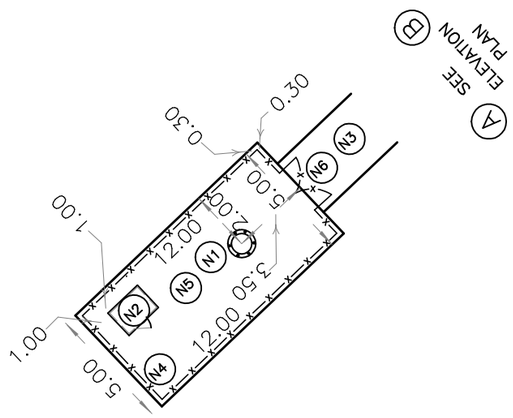

NOTES

(N1) PROPOSED STEEL MONOPOLE.
PAINT COLOUR SUBJECT TO NAV CANADA REQUIREMENTS.
ANTENNA NUMBER AND LOCATIONS TO BE DETERMINED.
FOUNDATION DESIGN PENDING SOIL REPORT.

(N2) PROPOSED RADIO EQUIPMENT SHELTER ON REINFORCED CONCRETE SLAB.

(N3) PROPOSED ACCESS WAY AND HYDRO/FIBER OPTIC CONNECTION.

(N4) PROPOSED 2.4 m HIGH CHAIN LINK SECURITY FENCE TOPPED WITH BARBED WIRE SURROUNDING THE COMPOUND.

(N5) REMOVE EXISTING TOPSOIL, PROOF ROLL SUBGRADE AND PLACE 300 mm GRANULAR ACROSS COMPOUND AREA.
MATCH INTO EXISTING GRADES ADJACENT TO THE COMPOUND.
PROVIDE POSITIVE DRAINAGE AWAY FROM THE TOWER, SHELTERS AND HYDRO PAD TOWARDS THE NATURAL SLOPE OF THE SITE.
REINSTATE ALL DISTURBED AREAS.

(N6) PROPOSED CHAIN LINK GATE.

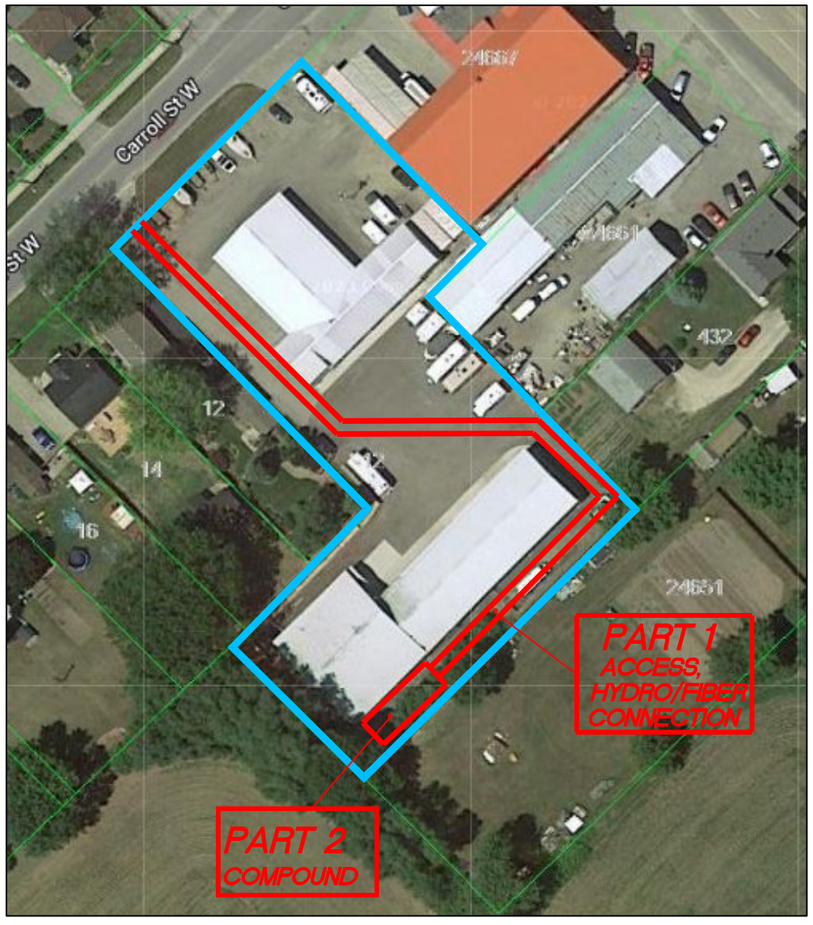

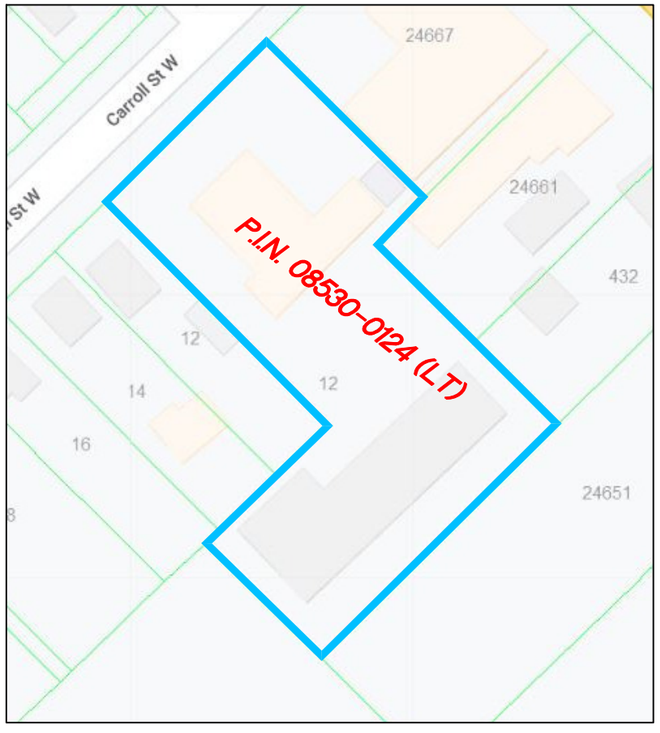

NOTE

THIS IS NOT A SURVEY.

NO LAND REGISTRY OFFICE SEARCH WAS PERFORMED.

NO FIELD MEASUREMENTS WERE PERFORMED.

NO EASEMENTS AND RIGHT OR WAY CHECKS WERE PERFORMED.

AMENDMENTS

No.	DESCRIPTION	DATE
1	COMPOUND AND ACCESS WAY REVISED	23.03.2023
2	TYPE AND HEIGHT OF TOWER REVISED	20.07.2023

APPROXIMATE LOCATION OF PROPOSED TOWER

LATITUDE 42.944861

LONGITUDE −81.612316

SITE: ON1717

SIGNUM WIRELESS